| DRAWING NO. | SHT | REV |
|---|---|---|
| 826116CG | 1 | – |

REVISIONS

| ZONE | REV | DESCRIPTION | DATE | APPROVED |
|---|---|---|---|---|
| | | | | |

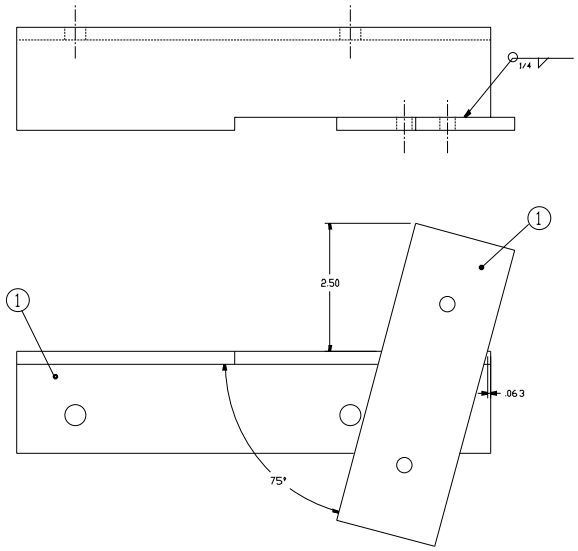


AIR INTAKE TUBE
BRACKET ASSEMBLY

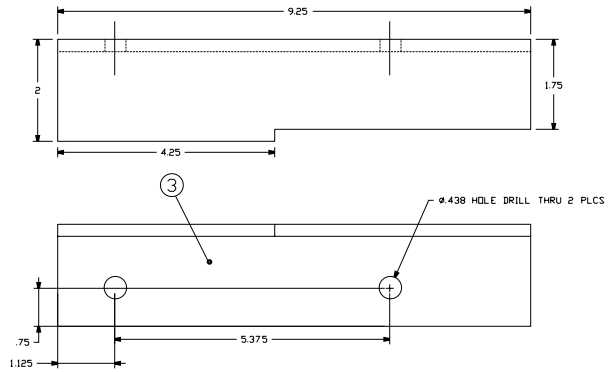


② ANGLE

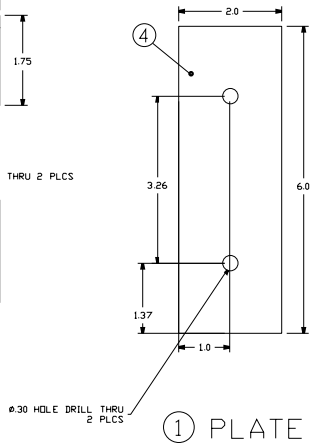


① PLATE

| FIND NO. | QTY REQD | CAGE CODE | PART OR IDENTIFYING NO. | NOMENCLATURE OR DESCRIPTION | MATERIAL OR NOTE |
|---|---|---|---|---|---|
| 4 | AR | | | 1/4" PLATE | 6061-T6 |
| 3 | AR | | | 2" X 2" X 1/4" ANGLE | 6061-T6 |
| 2 | 1 | OMWHO | -2 | ANGLE | |
| 1 | 1 | OMWHO | -1 | PLATE | |

PARTS LIST

**HIGHSTAR INDUSTRIAL TECHNOLOGIES**
3301-A BALLARD AVENUE, PORTSMOUTH, VA 23701

**U.S. COAST GUARD HEADQUARTERS**
**CIVIL ENGINEERING**

UNLESS OTHERWISE SPECIFIED:
DIMENSIONS ARE IN INCHES AND DEGREES
GENERAL TOLERANCES:

| .X DECIMAL | .XX DECIMAL | .XXX DECIMAL | ANGLE |
|---|---|---|---|
| ±.06 | ±.03 | ±.010 | ±2° |

REMOVE BURRS AND BREAK SHARP EDGES .03 MAX.
MISSE CORNERS R .06 MAX
SURFACE ROUGHNESS 125/
FRACTIONS: ±1/16

| | | |
|---|---|---|
| DESIGNED: | L MURPHY | |
| DRAWN: | G DILSON | |
| TRACED: | | |
| CHECKED | L MURPHY | |
| REVIEWED BY | | |
| APPROVED BY: | GARY VAN MOURIK | |
| E-SEC | | DATE: |
| CAD FILE NO. | 6116-1CG | DATE: 2-10-97 |

MATERIAL:
N/A

MODEL 82647CG HVPU
AIR INTAKE TUBE
BRACKET

| SIZE | CAGE CODE | DRAWING NO. | REV |
|---|---|---|---|
| D | OMWHO | 826116CG | – |

SCALE: 1"=1" SHEET 1 OF 1 CADD