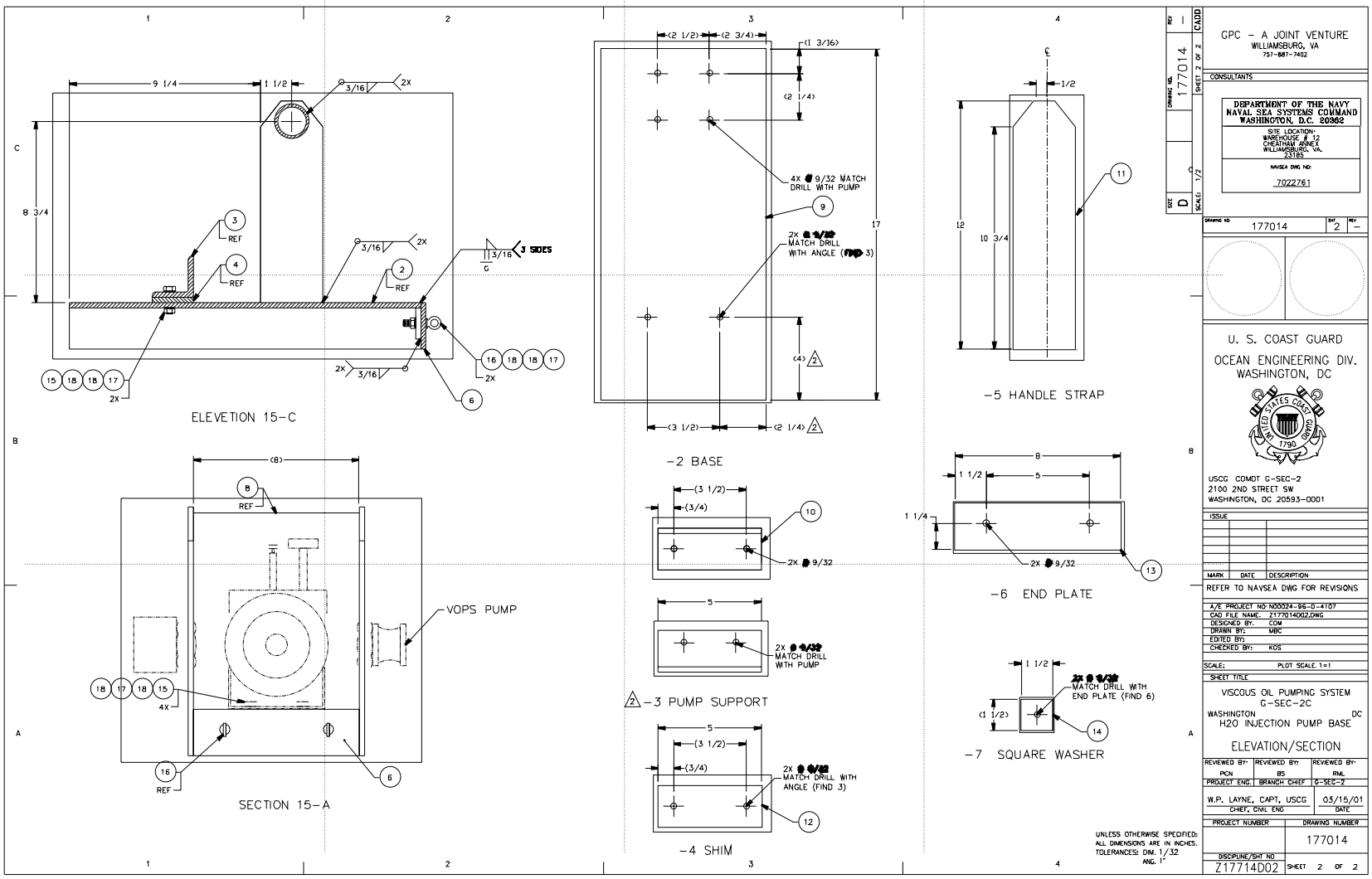

GPC – A JOINT VENTURE
WILLIAMSBURG, VA
757-887-7402

CONSULTANTS

DEPARTMENT OF THE NAVY
NAVAL SEA SYSTEMS COMMAND
WASHINGTON, D.C. 20362

SITE LOCATION:
WAREHOUSE # 12
CHEATHAM ANNEX
WILLIAMSBURG, VA.
23185

NAVSEA DWG NO:
7022761

DRAWING NO 177014 | SHT 2 | REV –

U. S. COAST GUARD
OCEAN ENGINEERING DIV.
WASHINGTON, DC

USCG COMDT G-SEC-2
2100 2ND STREET SW
WASHINGTON, DC 20593-0001

ISSUE		
MARK	DATE	DESCRIPTION

REFER TO NAVSEA DWG FOR REVISIONS

A/E PROJECT NO: N00024-96-D-4107
CAD FILE NAME: Z177014D02.DWG
DESIGNED BY: CDM
DRAWN BY: VBC
EDITED BY:
CHECKED BY: KGS

SCALE: PLOT SCALE 1=1

SHEET TITLE

VISCOUS OIL PUMPING SYSTEM
G-SEC-2C
WASHINGTON DC
H2O INJECTION PUMP BASE

ELEVATION/SECTION

REVIEWED BY: PCN	REVIEWED BY: BS	REVIEWED BY: RML
PROJECT ENG.	BRANCH CHIEF	G-SEC-2

W.P. LAYNE, CAPT, USCG — CHIEF, CIVIL ENG
03/15/01 — DATE

PROJECT NUMBER	DRAWING NUMBER
	177014
DISCIPLINE/SHT NO	SHEET 2 OF 2
Z17714D02	

REV –
CADD
DRAWING NO. 177014
SHEET 2 OF 2
SIZE D
SCALE: 1/2