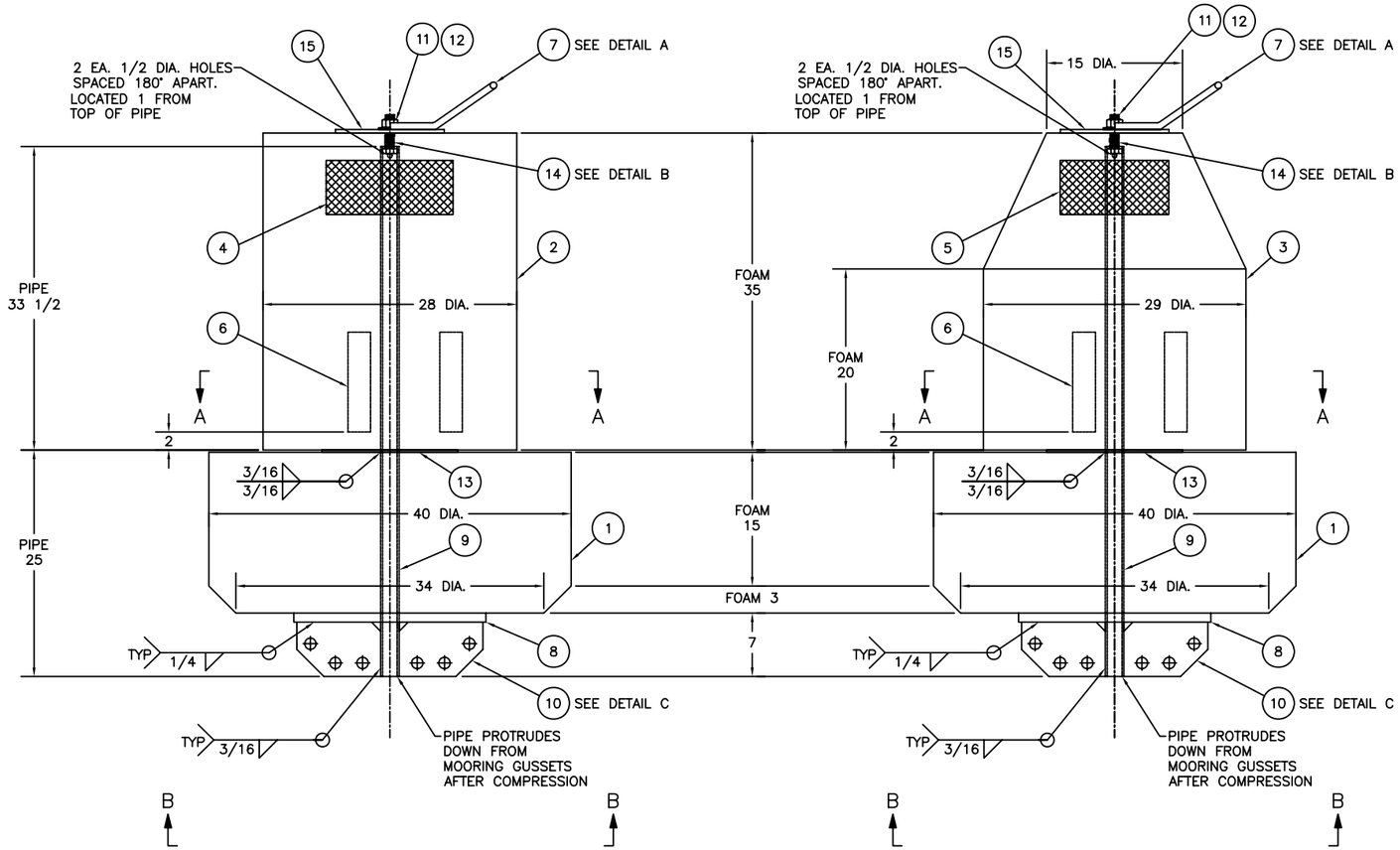

4FWCFR

SCALE: 1-1/2"=1'-0"

4FWNFR

SCALE: 1-1/2"=1'-0"

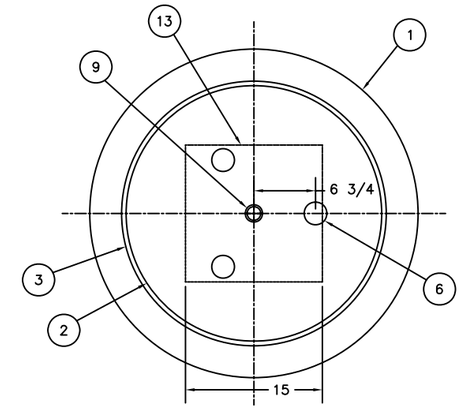

SECTION A-A

SCALE: 1-1/2"=1'-0"

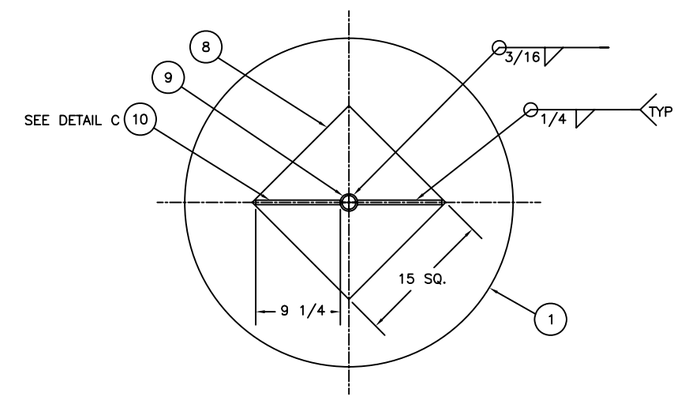

SECTION B-B

SCALE: 1-1/2"=1'-0"

REV.	DATE	APPR.	DESCRIPTION	BY

DESIGNED: G.C.
DRAWN: S.M.
TRACED:
CHECKED:
REVIEWED BY: S. Dawes, PROJECT ENGINEER
REVIEWED BY: S. McEvoy, G-SEC-2B
REVIEWED BY: W. Danzik

U.S. COAST GUARD — HEADQUARTERS
OCEAN ENGINEERING

4FWCFR AND 4FWNFR UNLIGHTED FOAM BUOY

APPROVED: S. D. Walker, CHIEF OF DIVISION
DATE: 04-30-09

UNLESS OTHERWISE SPECIFIED:
ALL DIMENSIONS ARE IN INCHES.
TOLERANCES: DIM. ±1/8
ANG. ±1°

DRAWING NUMBER: 121187
REV.
SCALE: AS NOTED
SHEET 1 OF 2

PLOTTING SCALE: 1-1/2"=1'-0"

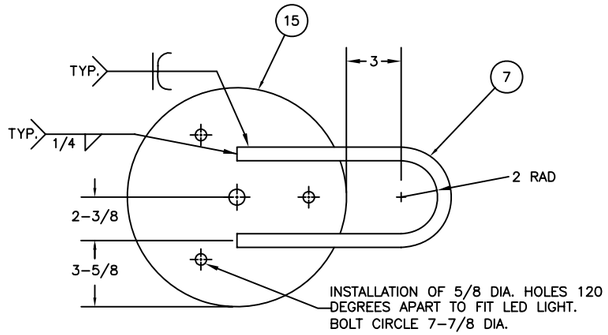

TOP VIEW

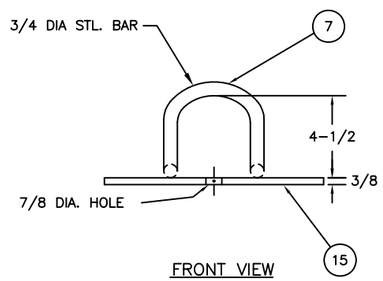

FRONT VIEW

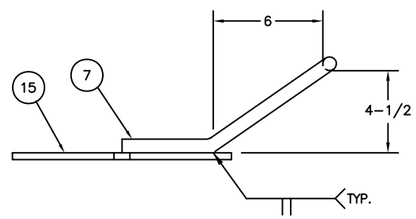

SIDE VIEW

DETAIL A

SCALE: 3"=1'-0"

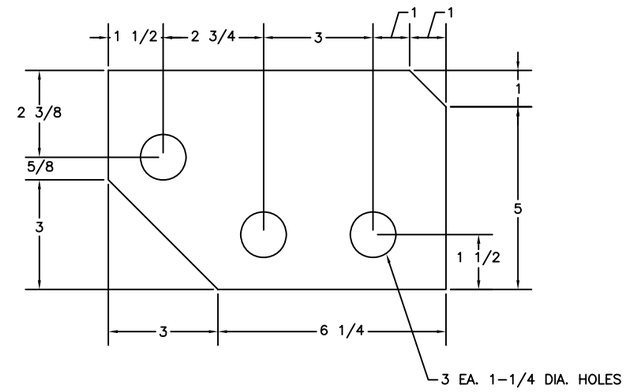

(10) DETAIL C

SCALE: HALF

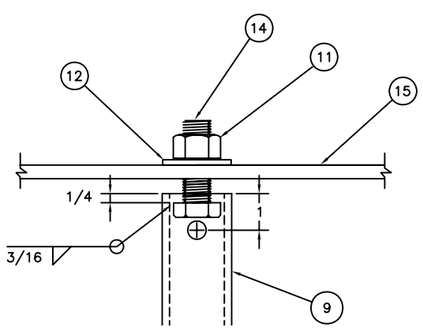

DETAIL B

SCALE: HALF

BILL OF MATERIALS

ITEM NO.	(CFR) NO. REQ.	(NFR) NO. REQ.	DESCRIPTION	MATL.	REMARKS
1	1	1	BUOY BODY	FOAM	3 PCF, SEE NOTE 1
2	1	–	BUOY TOP (CFR)	FOAM	3 PCF, SEE NOTES 1 – 3
3	–	1	BUOY TOP (NFR)	FOAM	3 PCF, SEE NOTES 1 – 3
4	3	–	RETROREFLECTIVE MATERIAL	---	6 x 14, SEE NOTE 4
5	–	3	RETROREFLECTIVE MATERIAL	---	6 x12, SEE NOTE 4
6	3	3	RADAR REFLECTOR ASSEMBLY	---	MOBRI M2 SEE NOTE 3
7	1	1	LIFTING EYE	STEEL	3/4 BAR
8	1	1	BOTTOM PLATE	STEEL	15 X 15 X 1 THK.
9	1	1	CENTER PIPE	STEEL	1 1/2 SCH 80 x 58 1/2
10	2	2	MOORING GUSSET	STEEL	1/2 THK.
11	1	1	NYLOCK NUT	STAINLESS STEEL	3/4-10 UNC-2B
12	1	1	WASHER	STAINLESS STEEL	3/4
13	1	1	MIDDLE PLATE	STEEL	15 X 15 X 1/4
14	1	1	HEX HEAD BOLT	STAINLESS STEEL	3/4-10 UNC-2AX3
15	1	1	TOP PLATE	STEEL	12 DIA X 3/8 PLATE

NOTES:

1. SEE LATEST REVISION OF U.S.C.G. CIVIL ENGINEERING SPECIFICATION No. 450 FOR FABRICATION REQUIREMENTS.

2. CUT HOLES IN ITEMS 2 & 3 TO PERMIT A TIGHT FIGHT WITH ITEM 6. FILL VOID WITH IONOMER FOAM PLUGS.

3. INSTALL ITEM 6 120 DEGREES APART.

4. INSTALL ITEMS 4 & 5, 120 DEGREES APART AND 6 INCHES FROM THE TOP ON THE BUOY BODY.

5. ITEMS 7, 8, 9, 10, 13, 14, & 15 SHALL BE HOT DIPPED GALVANIZED IN ACCORDANCE WITH THE SPECIFICATION.

REV.	DATE	APPR.	DESCRIPTION	BY

DESIGNED: G.C.
DRAWN: S.M.
TRACED:
CHECKED:
REVIEWED BY: S. Dawes, PROJECT ENGINEER
REVIEWED BY: S. McEvoy, G-ECV-3B
REVIEWED BY: W. Danzik

U.S. COAST GUARD HEADQUARTERS
CIVIL ENGINEERING

4FWCFR AND 4FWFNR
UNLIGHTED FOAM BUOY

APPROVED: S. D. Walker, CHIEF OF OCEAN ENGINEERING BRANCH
DATE: 04-30-09

UNLESS OTHERWISE SPECIFIED:
ALL DIMENSIONS ARE IN INCHES.
TOLERANCES: DIM. ±1/8
ANG. ±1°

DRAWING NUMBER: 121187
REV.
SCALE: AS NOTED
SHEET 2 OF 2

PLOTTING SCALE: 1-1/2"=1'-0"