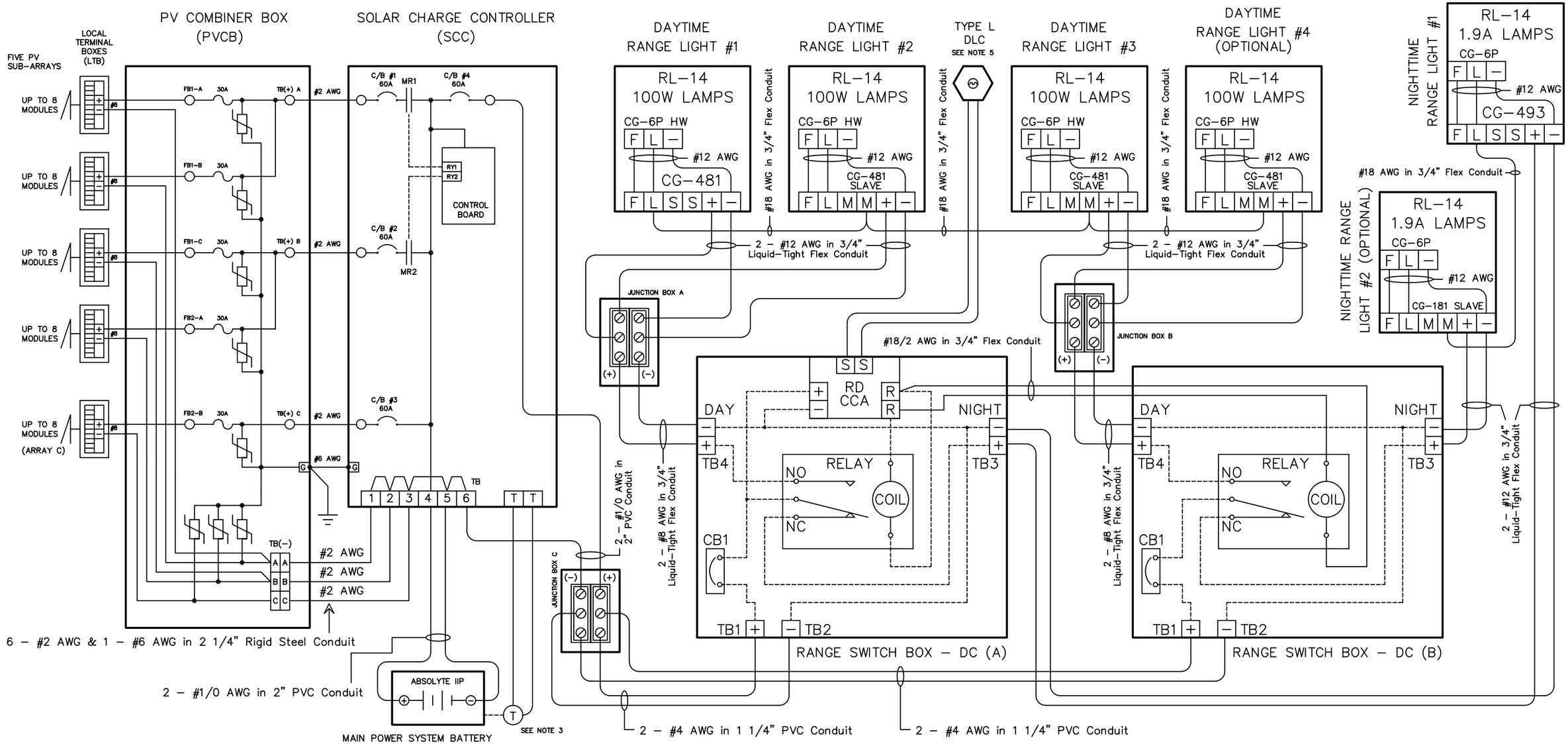

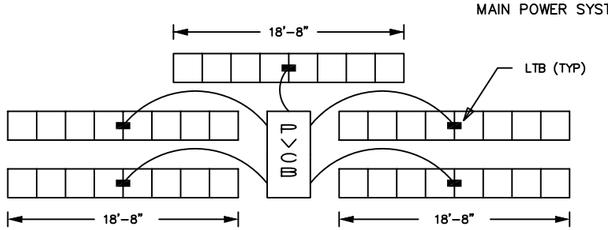

SOLAR PANEL LAYOUT DIAGRAM

NOTES:

1. SEE SHEET 2 FOR WIRE RUNNING LIST AND MATERIALS LIST.
2. THIS SYSTEM SHOULD BE TEMPORARILY ASSEMBLED AND TEST-OPERATED SUCCESSFULLY AT THE BASE PRIOR TO TRANSPORTING TO THE AID FOR PERMANENT INSTALLATION.
3. INSTALL CHARGE CONTROLLER TEMPERATURE COMPENSATION SENSOR ON SIDE OF MAIN BATTERY.
4. ALL WIRE RUNS SHALL BE ENCLOSED IN APPROPRIATELY SIZED RIGID OR LIQUID-TIGHT FLEX CONDUIT AS INDICATED TO FORM A WEATHERTIGHT SYSTEM AND PROTECT ELECTRICAL COMPONENTS FROM THE ELEMENTS.
5. EACH RSB-DC COMES WITH A TYPE L DLC INSTALLED. IF DESIRED, THE DLC MAY BE REMOVED FROM RSB-DC (A) AND MOUNTED IN A BETTER-SUITED LOCATION. IN THIS CASE, AN ADDITIONAL WIRE RUN IN A SMALL CONDUIT WILL BE REQUIRED. STORE THE UNUSED DLC FROM RSB-DC (B) IN A SAFE LOCATION OR WITH YOUR SPARE PARTS KIT.

REV.	DATE	APPR.	DESCRIPTION	BY

DESIGNED: KA
DRAWN: KA
TRACED:
CHECKED:
REVIEWED BY: JTG
G-SEC-2A
REVIEWED BY:
REVIEWED BY:

U.S. COAST GUARD HEADQUARTERS
CIVIL ENGINEERING

STANDARD AID TO NAVIGATION
SOLAR DAY/NIGHT RANGE
(RANGE CATEGORY S-D/N)
LARGE POWER/HIGH INTENSITY SYSTEM

APPROVED: H. R. CLEVELAND
CHIEF, OCEAN ENGINEERING DIVISION
DATE 12/9/04

UNLESS OTHERWISE SPECIFIED:
ALL DIMENSIONS ARE IN INCHES.
TOLERANCES: DIM.
ANG.

DRAWING NUMBER 140507
REV.
SCALE: NONE
SHEET 1 OF 2

PLOTTING SCALE:

POINT TO POINT WIRE RUNNING LIST

FROM	WIRE SIZE (AWG)	MAX DISTANCE (FT)	TO
MAIN PV SUB-ARRAY, LTB, A(+)	8	6	PV COMBINER BOX, FB1-A
MAIN PV SUB-ARRAY, LTB, A(-)	8	6	PV COMBINER BOX, TB(-) A
MAIN PV SUB-ARRAY, LTB, B(+)	8	6	PV COMBINER BOX, FB1-B
MAIN PV SUB-ARRAY, LTB, B(-)	8	6	PV COMBINER BOX, TB(-) A
MAIN PV SUB-ARRAY, LTB, C(+)	8	6	PV COMBINER BOX, FB1-C
MAIN PV SUB-ARRAY, LTB, C(-)	8	6	PV COMBINER BOX, TB(-) B
MAIN PV SUB-ARRAY, LTB, D(+)	8	6	PV COMBINER BOX, FB2-A
MAIN PV SUB-ARRAY, LTB, D(-)	8	6	PV COMBINER BOX, TB(-) B
MAIN PV SUB-ARRAY, LTB, E(+)	8	6	PV COMBINER BOX, FB2-B
MAIN PV SUB-ARRAY, LTB, E(-)	8	6	PV COMBINER BOX, TB(-) C
PV COMBINER BOX, TB(+) A	2	24	CHARGE CONTROLLER, CB1
PV COMBINER BOX, TB(-) A	2	24	CHARGE CONTROLLER, TB-1
PV COMBINER BOX, TB(+) B	2	24	CHARGE CONTROLLER, CB2
PV COMBINER BOX, TB(-) B	2	24	CHARGE CONTROLLER, TB-2
PV COMBINER BOX, TB(+) C	2	48	CHARGE CONTROLLER, CB3
PV COMBINER BOX, TB(-) C	2	48	CHARGE CONTROLLER, TB-3
PV COMBINER BOX, GROUND LUG	6	80	CHARGE CONTROLLER, GROUND LUG
CHARGE CONTROLLER, TB-4, BATTERY(+)	1/0	10	BATTERY BANK(+)
CHARGE CONTROLLER, TB-5, BATTERY(-)	1/0	10	BATTERY BANK(-)
CHARGE CONTROLLER, CB4, LOAD(+)	1/0	100	JUNCTION BOX C (+)
CHARGE CONTROLLER, TB-6, LOAD(-)	1/0	100	JUNCTION BOX C (-)
JUNCTION BOX C (+)	4	10	RSB-DC (A), TB1(+)
JUNCTION BOX C (-)	4	10	RSB-DC (A), TB2(-)
JUNCTION BOX C (+)	4	10	RSB-DC (B), TB1(+)
JUNCTION BOX C (-)	4	10	RSB-DC (B), TB2(-)
RSB-DC (A), TB4(+)	8	10	JUNCTION BOX A (+)
RSB-DC (A), TB4(-)	8	10	JUNCTION BOX A (-)
JUNCTION BOX A (+)	12	3	DAYTIME LIGHT #1, RL14(+)
JUNCTION BOX A (-)	12	3	DAYTIME LIGHT #1, RL14(-)
JUNCTION BOX A (+)	12	3	DAYTIME LIGHT #2, RL14(+)
JUNCTION BOX A (-)	12	3	DAYTIME LIGHT #2, RL14(-)
RSB-DC (B), TB4(+)	8	10	JUNCTION BOX B (+)
RSB-DC (B), TB4(-)	8	10	JUNCTION BOX B (-)
JUNCTION BOX B (+)	12	3	DAYTIME LIGHT #3, RL14(+)
JUNCTION BOX B (-)	12	3	DAYTIME LIGHT #3, RL14(-)
JUNCTION BOX B (+)	12	3	DAYTIME LIGHT #4, RL14(+)
JUNCTION BOX B (-)	12	3	DAYTIME LIGHT #4, RL14(-)
DAYTIME LIGHT #1, RL14, (L)	18		DAYTIME LIGHT #2, RL14, (M)
DAYTIME LIGHT #2, RL14, (M)	18		DAYTIME LIGHT #3, RL14, (M)
DAYTIME LIGHT #3, RL14, (M)	18		DAYTIME LIGHT #4, RL14, (M)
RSB-DC (A), RD CCA (R)	18		RSB-DC (B), RELAY COIL
RSB-DC (A), RD CCA (R)	18		RSB-DC (B), RELAY COIL
RSB-DC (A), TB3(+)	12		NIGHTTIME LIGHT #1, RL14(+)
RSB-DC (A), TB3(-)	12		NIGHTTIME LIGHT #1, RL14(-)
RSB-DC (B), TB3(+)	12		NIGHTTIME LIGHT #2, RL14(+)
RSB-DC (B), TB3(-)	12		NIGHTTIME LIGHT #2, RL14(-)
NIGHTTIME LIGHT #1, RL14, (L)	18		NIGHTTIME LIGHT #2, RL14, (M)

MAXIMUM DISTANCES SHOWN ABOVE ARE BASED ON THE CONFIGURATION SHOWN IN SHEET 1.
CONSULT WITH THE WIRING SIZING GUIDE IN THE SOLAR DESIGN MANUAL (COMDTINST M16500.24) WHEN CONFIGURATION IS DIFFERENT.

BILL OF MATERIALS

ITEM	TYPE	SOURCE OF SUPPLY	QUANTITY
SOLAR PANEL (35-WATT)	G-ECV QPL 401A	ELC	SEE NOTE 1
PV COMBINER BOX	PVCB	G-SEC	1
SOLAR CHARGE CONTROLLER	SCC	G-SEC	1
MAIN BATTERY, LEAD ACID, SIX 2-VOLT CELLS	ABSOLYTE IIP	GNB, INC.	SEE NOTE 1
RANGE SWITCH BOX - DC	RSB-DC (WITH TYPE L DLC)	G-SEC	2
LOCAL TERMINAL BOX	LTB	G-SEC	AS REQUIRED
14" RANGE BEACONS	RL14	ELC	6
DAYTIME LAMPS	12VDC, 100W	ELC	24
NIGHTTIME LAMPS	12VDC, 1.9A	ELC	12
HI-WATTAGE FLASHER	CG-481	ELC	1
HI-WATTAGE SLAVE FLASHER	CG-481	ACSI	3
HI-WATTAGE LAMPCHANGER	CG-6P HW	ELC	4
LAMPCHANGER	CG-6P	ELC	2
FLASHER	CG-181/CG-493	ELC	1
SLAVE FLASHER	CG-181 SLAVE	C-R CONTROL SYSTEMS	1
JUNCTION BOX (J-BOX) W/ MOUNTING PANEL	HAMMOND MFG. #PJ864H W/ #14R0705	COMMERCIAL	3
TERMINAL BLOCK FOR J-BOXES	SQUARE D #LBA262104	COMMERCIAL	3

NOTES:

1. THE MAIN PV ARRAY CONSISTS OF 35-WATT PANELS, DIVIDED INTO UP TO 5 GROUPS. EACH GROUP CONSISTS OF UP TO 8 PANELS CONNECTED AS SHOWN IN SHEET 1 AND TERMINATED AT A LOCAL TERMINAL BOX. THE NUMBER OF PANELS AND TILT ANGLE SHALL BE DETERMINED BY THE SOLARCALC SOLAR-SIZING COMPUTER PROGRAM.
2. SYSTEM DESIGNED ON THE PREMISE THAT SOLAR PANELS AND BATTERIES WILL BE LOCATED NEAR EACH OTHER WITH SIGNAL LOADS FARTHER UP THE RANGE STRUCTURE.
3. RSB FEEDER WIRE SIZES ARE BASED ON DUAL DAYTIME LOADS AT EACH RSB. WIRES MAY BE RESIZED SO LONG AS LOAD AND CHARGING CIRCUIT VOLTAGE DROPS DO NOT EXCEED 0.35 VOLT AND 0.75 VOLT, RESPECTIVELY.
4. SIZE ARRAY "C" SO THAT CHARGE RATE IS BETWEEN C/100 AND C/200.
5. SEE TECHNICAL DATA SHEET NUMBER TD-01-01 FOR MORE INFORMATION ON RSB MODS FOR HIGH-INTENSITY DAY/NIGHT RANGES. TD-01-01 CAN BE FOUND AT: www.uscg.mil/systems/gse/gse2/TechDataSheets.htm

REV.	DATE	APPR.	DESCRIPTION	BY

DESIGNED: KA
DRAWN: KA
TRACED:
CHECKED:
REVIEWED BY: JTG
G-SEC-2A
REVIEWED BY:
REVIEWED BY:

U.S. COAST GUARD HEADQUARTERS
CIVIL ENGINEERING

STANDARD AID TO NAVIGATION
SOLAR DAY/NIGHT RANGE
(RANGE CATEGORY S-D/N)
LARGE POWER/HIGH INTENSITY SYSTEM

APPROVED: H. R. CLEVELAND
CHIEF, OCEAN ENGINEERING BRANCH
DATE 12/9/04

UNLESS OTHERWISE SPECIFIED:
ALL DIMENSIONS ARE IN INCHES.
TOLERANCES: DIM.
ANG.

DRAWING NUMBER 140507
REV.
SCALE: NONE
SHEET 2 OF 2

PLOTTING SCALE: