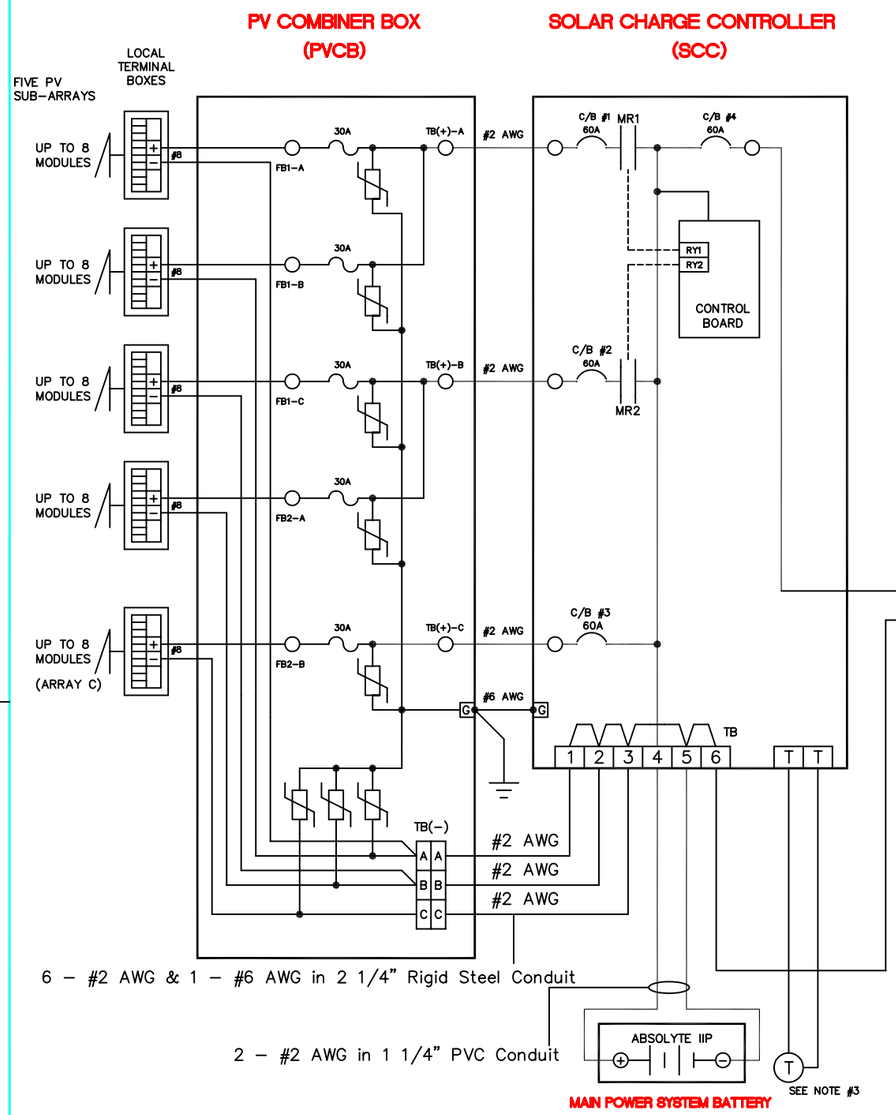

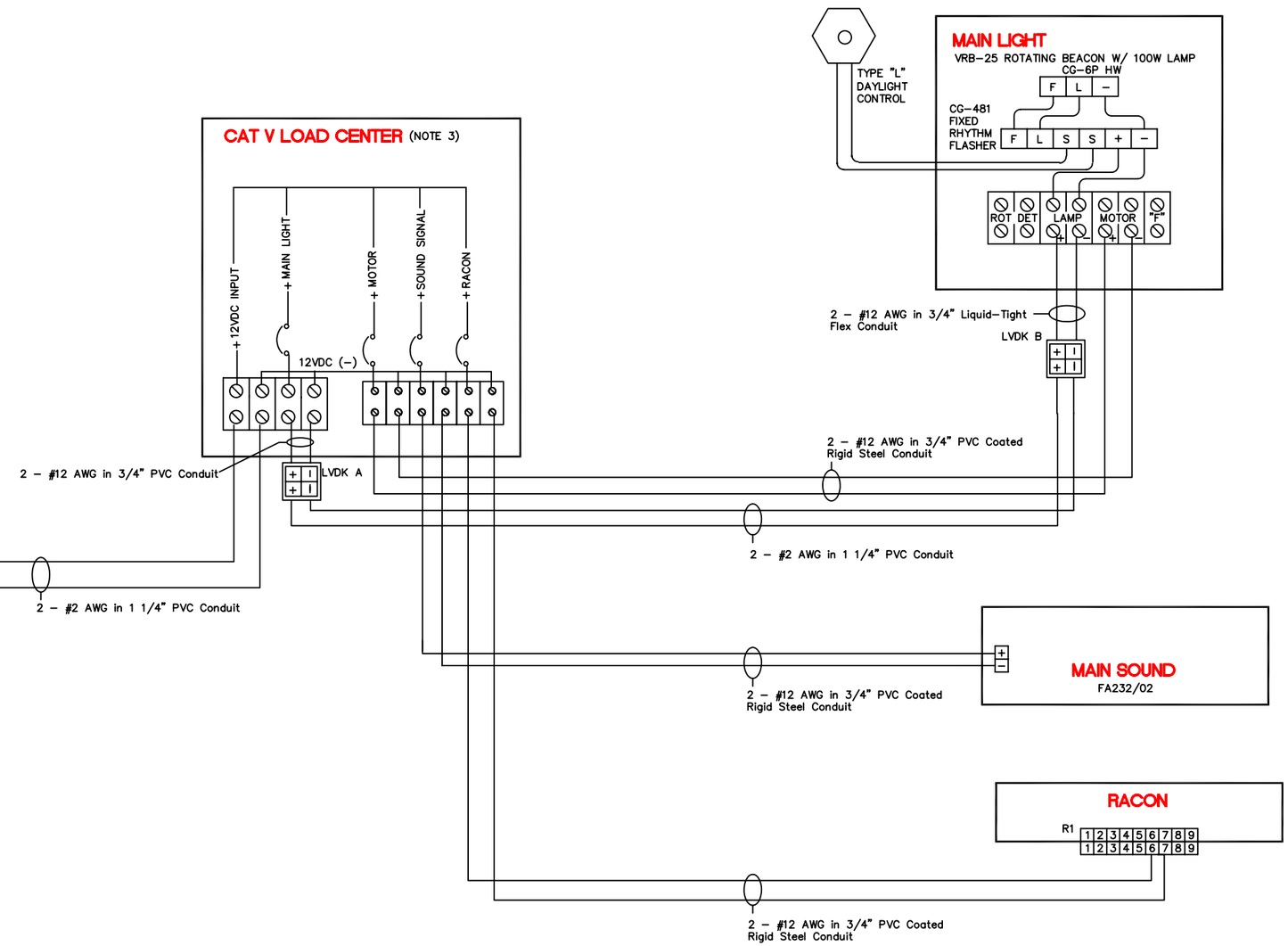

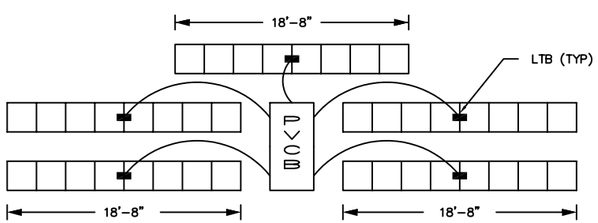

SOLAR PANEL LAYOUT DIAGRAM

NOTES:

1. SEE SHEET 2 FOR WIRE RUNNING LIST, LOAD INTERCONNECTION, AND MATERIALS LIST.
2. THIS SYSTEM SHOULD BE TEMPORARILY ASSEMBLED AND TEST-OPERATED SUCCESSFULLY AT THE BASE PRIOR TO TRANSPORTING TO THE AID FOR PERMANENT INSTALLATION.
3. INSTALL CHARGE CONTROLLER TEMPERATURE COMPENSATION SENSOR ON SIDE OF MAIN BATTERY.
4. ALL WIRE RUNS SHALL BE ENCLOSED IN APPROPRIATELY SIZED RIGID OR LIQUID-TIGHT FLEX CONDUIT AS INDICATED TO FORM A WEATHERTIGHT SYSTEM AND PROTECT ELECTRICAL COMPONENTS FROM THE ELEMENTS.

REV.	DATE	APPR.	DESCRIPTION	BY

DESIGNED:
DRAWN:
TRACED:
CHECKED:
REVIEWED BY:
G-SEC-2A
REVIEWED BY:
REVIEWED BY:

U.S. COAST GUARD HEADQUARTERS
CIVIL ENGINEERING

STANDARD AID TO NAVIGATION
CATEGORY III
SOLAR POWERED LIGHTHOUSE
LARGE POWER SYSTEM

APPROVED:
CHIEF, OCEAN ENGINEERING DIVISION
DATE

UNLESS OTHERWISE SPECIFIED:
ALL DIMENSIONS ARE IN INCHES.
TOLERANCES: DIM.
ANG.

DRAWING NUMBER: 140415
REV.
SCALE: NONE
SHEET 1 OF 2

PLOTTING SCALE:

NOTES:

1. THE MAIN PV ARRAY CONSISTS OF 35-WATT PANELS, DIVIDED INTO UP TO 5 SUB-ARRAYS. EACH SUB-ARRAY CONSISTS OF UP TO 8 PANELS CONNECTED AS SHOWN IN SHEET 1, AND TERMINATED AT A LOCAL TERMINAL BOX. THE NUMBER OF PANELS, BATTERY SIZE AND TILT ANGLE SHALL BE DETERMINED BY THE SOLARCALC COMPUTER PROGRAM.
2. SYSTEM DESIGNED ON THE PREMISE THAT SOLAR PANELS AND BATTERIES WILL BE LOCATED NEAR EACH OTHER WITH SIGNAL LOADS FARTHER UP THE LIGHTHOUSE STRUCTURE.
3. WIRE SIZES ARE BASED ON MAXIMUM ANTICIPATED LOADS. WIRES MAY BE RESIZED ONLY IF LOAD AND CHARGING CIRCUIT VOLTAGE DROPS DO NOT EXCEED 0.35 VOLT AND 0.75 VOLT, RESPECTIVELY.
4. THE LOW VOLTAGE DROP PACKAGE CONSISTS OF TWO TERMINAL BOXES AND TWO #12/2 AWG CABLES (6 FT. EA.); PROJECT MANAGER BUYS #2 OR #1/0 CONDUCTOR AS NEEDED FOR SPECIFIC APPLICATION.

POINT TO POINT WIRE RUNNING LIST

FROM	WIRE SIZE (AWG)	MAX DISTANCE (FT)	TO
MAIN PV SUB-ARRAY, LTB, A(+)	8	6	PV COMBINER BOX, FB1-A
MAIN PV SUB-ARRAY, LTB, A(-)	8	6	PV COMBINER BOX, TB(-)
MAIN PV SUB-ARRAY, LTB, B(+)	8	6	PV COMBINER BOX, FB1-B
MAIN PV SUB-ARRAY, LTB, B(-)	8	6	PV COMBINER BOX, TB(-)
MAIN PV SUB-ARRAY, LTB, C(+)	8	6	PV COMBINER BOX, FB1-C
MAIN PV SUB-ARRAY, LTB, C(-)	8	6	PV COMBINER BOX, TB(-)
MAIN PV SUB-ARRAY, LTB, D(+)	8	6	PV COMBINER BOX, FB2-A
MAIN PV SUB-ARRAY, LTB, D(-)	8	6	PV COMBINER BOX, TB(-)
MAIN PV SUB-ARRAY, LTB, E(+)	8	6	PV COMBINER BOX, FB2-B
MAIN PV SUB-ARRAY, LTB, E(-)	8	6	PV COMBINER BOX, TB(-)
PV COMBINER BOX, TB(+) A	2	24	CHARGE CONTROLLER, CB1
PV COMBINER BOX, TB(-) A	2	24	CHARGE CONTROLLER, TB-1
PV COMBINER BOX, TB(+) B	2	24	CHARGE CONTROLLER, CB2
PV COMBINER BOX, TB(-) B	2	24	CHARGE CONTROLLER, TB-2
PV COMBINER BOX, TB(+) C	2	48	CHARGE CONTROLLER, CB3
PV COMBINER BOX, TB(-) C	2	48	CHARGE CONTROLLER, TB-3
PV COMBINER BOX, GROUND LUG	6	80	CHARGE CONTROLLER, GROUND LUG
CHARGE CONTROLLER, TB-4, BATTERY(+)	2	3.6	BATTERY BANK(+)
CHARGE CONTROLLER, TB-5, BATTERY(-)	2	3.6	BATTERY BANK(-)
CHARGE CONTROLLER, CB4, LOAD(+)	2	10	CAT V LC 12VDC INPUT (+)
CHARGE CONTROLLER, TB-6, LOAD(-)	2	10	CAT V LC 12VDC INPUT (-)
CAT V LC MAIN LIGHT (+)	12	2.5	LOW VOLTAGE DROP BOX, A(+)
CAT V LC MAIN LIGHT (-)	12	2.5	LOW VOLTAGE DROP BOX, A(-)
LOW VOLTAGE DROP BOX, A(+)	2	150	LOW VOLTAGE DROP BOX, B(+)
LOW VOLTAGE DROP BOX, A(-)	2	150	LOW VOLTAGE DROP BOX, B(-)
LOW VOLTAGE DROP BOX, B(+)	12	2.5	MAIN LIGHT, LAMP(+)
LOW VOLTAGE DROP BOX, B(-)	12	2.5	MAIN LIGHT, LAMP(-)
MAIN LIGHT, LAMP(+)	12	2.5	MAIN LIGHT, CG-181(+)
MAIN LIGHT, LAMP(-)	12	2.5	MAIN LIGHT, CG-181(-)
CAT V LC MOTOR (+)	12	150	MAIN LIGHT, MOTOR(+)
CAT V LC MOTOR (-)	12	150	MAIN LIGHT, MOTOR(-)
PHOTORESISTOR, IST LEAD	18	150	MAIN LIGHT, FLASHER(S)
PHOTORESISTOR, 2ND LEAD	18	150	MAIN LIGHT, FLASHER(S)
CAT V LC SOUND SIGNAL (+)	10	40	MAIN SOUND SIGNAL(+)
CAT V LC SOUND SIGNAL (-)	10	40	MAIN SOUND SIGNAL(-)
CAT V LC RACON (+)	12	160	RACON, P1-6(+)
CAT V LC RACON (-)	12	160	RACON, P1-7(-)

MAXIMUM DISTANCES SHOWN ABOVE ARE BASED ON THE CONFIGURATION SHOWN ON SHEETS 1 & 2.
CONSULT WITH THE WIRING SIZING GUIDE (G-SEC-2A) WHEN CONFIGURATION IS DIFFERENT.

BILL OF MATERIALS

ITEM	TYPE	SOURCE OF SUPPLY	QUANTITY
SOLAR PANEL (35-WATT)	G-ECV QPL 401A	ELC	SEE NOTE 1
MAIN BATTERY, LEAD ACID, SIX 2-VOLT CELLS	ABSOLYTE IIP	GNB, INC.	SEE NOTE 1
LOCAL TERMINAL BOX	LTB	G-SEC	5
PV COMBINER BOX	PVCB	G-SEC	1
CHARGE CONTROLLER	SCC	G-SEC	1
CAT V LOAD CENTER	LC-1	G-SEC	1
LOW VOLTAGE DROP PACKAGE	LVDK	G-SEC	SEE NOTE 4
ROTATING BEACON, 12 VOLT	VRB-25	G-SEC	1
LAMPCHANGER, 12 VOLT	CG-6P	ELC	1
FIXED RHYTHM FLASHER	CG-181/CG-493	ELC	1
PHOTORESISTOR	L	ELC	1
MAIN LAMPS	12VDC, 1.9A	ELC	6
SOUND SIGNAL	FA-232/02	AUTOMATIC POWER, INC.	1
RACON	TIDELAND SIGNAL CORP.	G-OPN	1

REV.	DATE	APPR.	DESCRIPTION	BY

DESIGNED:
DRAWN:
TRACED:
CHECKED:
REVIEWED BY:
G-SEC-2A
REVIEWED BY:
REVIEWED BY:

U.S. COAST GUARD HEADQUARTERS
CIVIL ENGINEERING
STANDARD AID TO NAVIGATION
CATEGORY III
SOLAR POWERED LIGHTHOUSE SYSTEM
LARGE POWER SYSTEM

APPROVED: DATE
CHIEF, OCEAN ENGINEERING DIVISION

UNLESS OTHERWISE SPECIFIED:
ALL DIMENSIONS ARE IN INCHES.
TOLERANCES: DIM.
ANG.

DRAWING NUMBER 140415 REV.
SCALE: NONE SHEET 2 OF 2

PLOTTING SCALE: