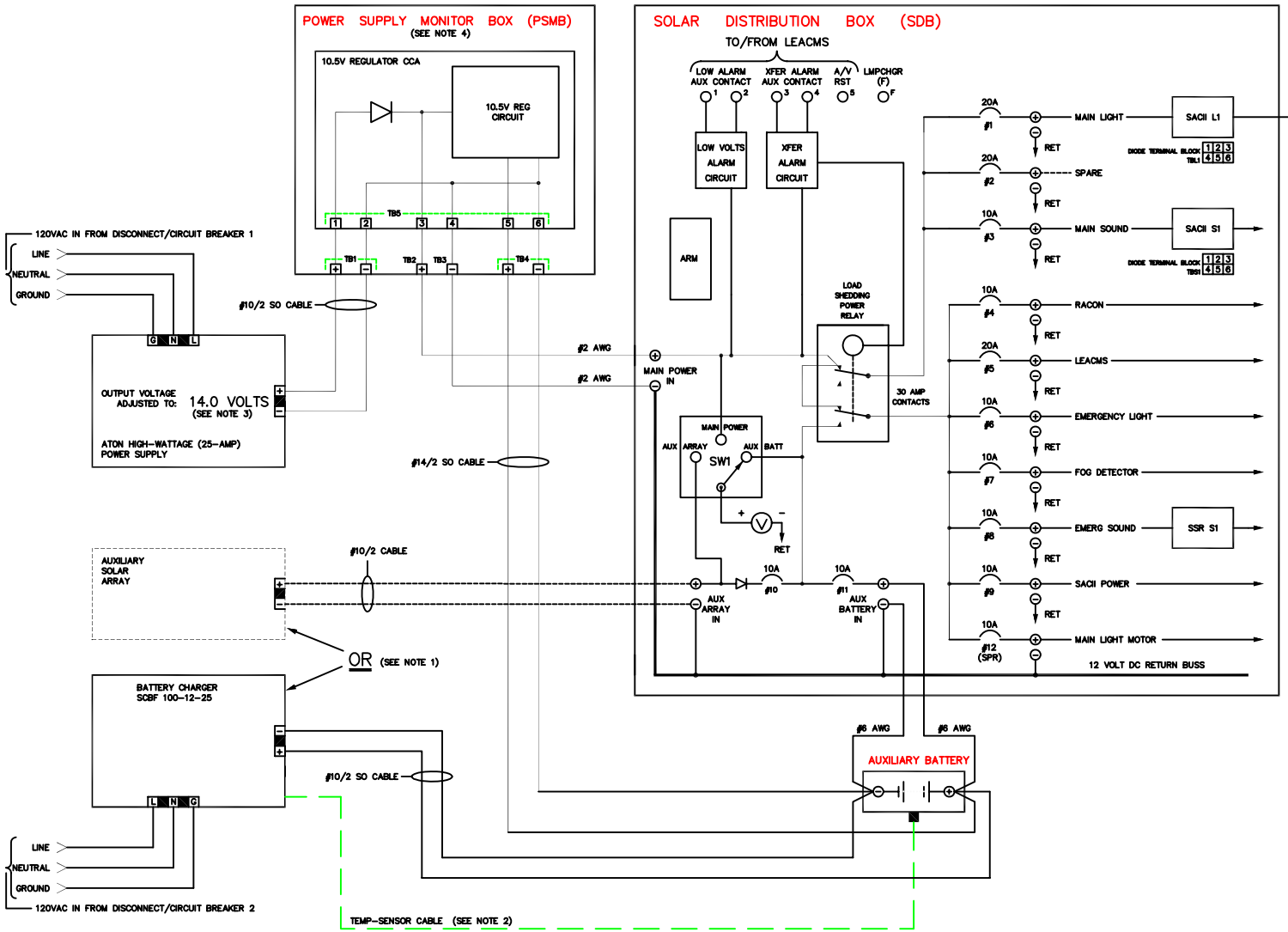

THEORY OF OPERATION:

WHEN USING THE SDB IN A COMMERCIALLY-POWERED LIGHTHOUSE SYSTEM WITH EMERGENCY SIGNALS, A PSMB IS REQUIRED TO ENSURE PROPER SYSTEM OPERATION DURING A POWER OUTAGE. THE PSMB PROVIDES 10.5VDC POWER TO THE SDB DURING POWER OUTAGE THUS ENABLING THE SDB TO CONTINUE OPERATING IN THE "BATTERY TRANSFER" ALARM MODE. THEN, WHEN COMMERCIAL POWER IS RESTORED, THE PSMB "REMOVES" THE 10.5VDC AND "RECONNECTS" POWER SUPPLY POWER TO THE SDB'S MAIN POWER IN TERMINALS (ABOUT 13.3VDC AFTER ACCOUNTING FOR FORWARD VOLTAGE DROP OF THE DIODE) AUTOMATICALLY RESETTING THE SDB AND BRINGING THE SYSTEM BACK TO PRIMARY MODE OF OPERATION. WITHOUT A PSMB, THE SDB WOULD BECOME NON-OPERATIONAL IMMEDIATELY UPON POWER FAILURE CAUSING ALL AUXILIARY AND EMERGENCY SYSTEMS TO BECOME NON-OPERATIONAL AS WELL. THE 10.5V REGULATOR CIRCUIT WITHIN THE PSMB IS POWERED CONTINUOUSLY AND INDEPENDENTLY BY THE AUXILIARY BATTERY.

NOTES:

1. AN AUXILIARY ARRAY MAY BE USED INSTEAD OF THE BATTERY CHARGER FOR CHARGING THE AUXILIARY BATTERY AS LONG AS THE EXTENDED RECHARGE TIME IS ACCEPTABLE.
2. IF USING THE BATTERY CHARGER, INSTALL A TEMPERATURE COMPENSATION SENSOR ON SIDE OF AUXILIARY BATTERY.
3. THE OUTPUT OF THE ATON HIGH-WATTAGE POWER SUPPLY MUST BE SET TO 14.0VDC. THE SUPPLY'S COVER MUST BE REMOVED TO ACCESS AND ADJUST THE VOLTAGE-TRIM POTENTIOMETER. IF OUTPUT IS NOT ADJUSTED TO 14.0VDC, THE SYSTEM WILL NOT RESET PROPERLY UPON POWER UP AFTER INCURRING A COMMERCIAL POWER FAILURE. PLEASE REFER TO DOCUMENTATION PACKAGED WITH THE POWER SUPPLY FOR VOLTAGE ADJUSTMENT INFORMATION.
4. THE TWO #2 AWG WIRES BETWEEN THE PSMB AND SDB MUST BE KEPT AS SHORT AS POSSIBLE; TO ENSURE THIS, THE PSMB MUST BE INSTALLED AS CLOSE TO THE SDB AS POSSIBLE.
5. SEE SHEET 2 FOR THE WIRE RUNNING AND MATERIALS LISTS.
6. SEE STANDARD DRAWING 140410, SHEET 2, FOR THE LOAD INTERCONNECTION DIAGRAM.
7. THIS SYSTEM SHOULD BE TEMPORARILY ASSEMBLED AND TEST-OPERATED SUCCESSFULLY AT THE BASE PRIOR TO TRANSPORTING TO THE AID FOR PERMANENT INSTALLATION.

REV.	DATE	APPR.	DESCRIPTION	BY

DESIGNED: KA
DRAWN: KA
TRACED:
CHECKED: JTG
REVIEWED BY:
REVIEWED BY: H. R. CLEVELAND G-SEC-2A
REVIEWED BY: R. J. LEGIER G-SEC-2

U.S. COAST GUARD HEADQUARTERS
CIVIL ENGINEERING

STANDARD AID TO NAVIGATION
COMMERCIAL POWERED CAT I – III
12VDC LIGHTHOUSE SYSTEM
WITH EMERGENCY SIGNALS

APPROVED: CAPT J. A. RAUCH
CHIEF, OFFICE OF CIVIL ENGINEERING
DATE: 2/11/98

UNLESS OTHERWISE SPECIFIED:
ALL DIMENSIONS ARE IN INCHES.
TOLERANCES: DIM.
ANG.

DRAWING NUMBER: 130426
REV.
SCALE: NONE
SHEET 1 OF 2

PLOTTING SCALE:

POINT TO POINT WIRE RUNNING LIST

FROM	WIRE SIZE (AWG)	MAX DISTANCE (FT)	TO
DISCONNECT/CKT BREAKER 1, LINE	12	10	ATON PWR SUPPLY, LINE IN
DISCONNECT/CKT BREAKER 1, NEUTRAL	12	10	ATON PWR SUPPLY, NEUTRAL IN
DISCONNECT/CKT BREAKER 1, GROUND	12	10	ATON PWR SUPPLY, GROUND IN
ATON PWR SUPPLY, 14.0VDC OUT(+)	10	10	PSMB, TB1(+)
ATON PWR SUPPLY, 14.0VDC OUT(−)	10	10	PSMB, TB1(−)
PSMB, TB2	2	10	SDB, MAIN POWER IN TERM(+)
PSMB, TB3	2	10	SDB, MAIN POWER IN TERM(−)
PSMB, TB4(+)	14	100	AUX BATTERY(+)
PSMB, TB4(−)	14	100	AUX BATTERY(−)
SDB, AUX BATTERY IN TERM(+)	6	72	AUX BATTERY(+)
SDB, AUX BATTERY IN TERM(−)	6	72	AUX BATTERY(−)
SDB, PIN 1(+)	12	2	LOW VOLTAGE DROP BOX, A(+)
SDB, PIN 1(−)	12	2	SACII L1, TB2−2
SACII L1, TB2−1	12	2	LOW VOLTAGE DROP BOX, A(−)
LOW VOLTAGE DROP BOX, A(+)	2	45	LOW VOLTAGE DROP BOX, B(+)
LOW VOLTAGE DROP BOX, A(−)	2	45	LOW VOLTAGE DROP BOX, B(−)
LOW VOLTAGE DROP BOX, B(+)	12	2	MAIN LIGHT, LAMP(+)
LOW VOLTAGE DROP BOX, B(−)	12	2	MAIN LIGHT, LAMP(−)
SACII L1, TB2−3	12	150	SDB, AUXILIARY RESET MODULE, TB1−5
SDB, LMPCHGR (F)	12	150	MAIN LIGHT, "F" PULSE
SDB, PIN 12(SPR)(+)	12	150	MAIN LIGHT, MOTOR(+)
SDB, PIN 12(SPR)(−)	12	150	MAIN LIGHT, MOTOR(−)
MAIN LIGHT, ROTATION DETECTOR	12		MAIN LIGHT, MOTOR(−)
SACII L1, TB1−4 SHIELDED	18	150	MAIN LIGHT, ROTATION DETECTOR
SACII L1, TB1−5	18	150	PHOTORESISTOR, 1ST LEAD
SACII L1, TB1−2	18	150	PHOTORESISTOR, 2ND LEAD
SDB, PIN 3(+)	10	40	MAIN SOUND SIGNAL(+)
SDB, PIN 3(−)	10	6	SACII S1, TB2−2
MAIN SOUND SIGNAL(−)	10	40	SACII S1, TB2−1
SDB, PIN 4(+)	12	160	RACON, P1−6(+)
SDB, PIN 4(−)	12	160	RACON, P1−7(−)
RACON, P1−3	18		RACON, P1−7(−)
SDB, PIN 5(+)	10	80	LE ACMS, 1TB2−20, VIA P1
SDB, PIN 5(−)	10	80	LE ACMS, 1A3Q1−2, VIA P1
SACII L1, TB1−10	18	6	DIODE TERMINAL BLOCK, TBL1−2
DIODE TERMINAL BLOCK, TBL1−1	18	100	EMERGENCY LIGHT, FLASHER(S)
SDB, PIN 6(+)	8	73	EMERGENCY LIGHT, FLASHER(+)
SDB, PIN 6(−)	8	73	EMERGENCY LIGHT, FLASHER(−)
SDB, PIN 8(+)	12	30	EMERGENCY SOUND SIGNAL(+)
SDB, PIN 8(−)	12	2	SOLID STATE RELAY S1, PIN 1
EMERGENCY SOUND SIGNAL(−)	12	30	SOLID STATE RELAY S1, PIN 2
SDB, PIN 9(+)	18		SACII S1, TB1−1
SACII S1, TB1−1	18		SACII L1, TB1−1
SACII S1, TB1−1	18		SOLID STATE RELAY S1, PIN 3
SACII S1, TB1−2	18		SACII S1, TB1−3
SACII S1, TB1−10	18		SDB, DIODE TERMINAL BLOCK, TBS1−2
SDB, DIODE TERMINAL BLOCK, TBS1−1	18		SOLID STATE RELAY S1, PIN 4
SACII S1, TB1−2	18		SSCD #1
SSCD #1	18		SSCD #2
SSCD #2	18		SACII S1, TB1−4
SACII L1, TB1−6	18		SDB, AUXILIARY RESET MODULE, TB1−2
SACII S1, TB1−6	18		SDB, AUXILIARY RESET MODULE, TB1−3
SACII L1, TB1−8	18		OPTO BRD 1A2TB2−2 VIA P4
SACII L1, TB1−7	18		OPTO BRD 1A2TB2−4 VIA P4
SDB, DIODE TERMINAL BLOCK, TBL1−3	18		OPTO BRD 1A2TB2−6 VIA P4
SACII S1, TB1−8	18		OPTO BRD 1A2TB2−8 VIA P4
SACII S1, TB1−7	18		OPTO BRD 1A2TB2−10 VIA P4
SDB, DIODE TERMINAL BLOCK, TBS1−3	18		OPTO BRD 1A2TB2−12 VIA P4
SDB, LOW ALARM 2	18		OPTO BRD 1A2TB2−14 VIA P4
RACON, P1−2	18		OPTO BRD 1A2TB2−24 VIA P3
SDB, A/V RST (5)	18		OPTO BRD 1A2TB2−27 VIA P4
SACII S1, TB1−5	18		OPTO BRD 1A2TB2−29 VIA P4
IF USING BATTERY CHARGER:			
DISCONNECT/CKT BREAKER 2, LINE	12	10	BATTERY CHARGER, LINE IN
DISCONNECT/CKT BREAKER 2, NEUTRAL	12	10	BATTERY CHARGER, NEUTRAL IN
DISCONNECT/CKT BREAKER 2, GROUND	12	10	BATTERY CHARGER, GROUND IN
BATTERY CHARGER, OUT(+)	10	20	AUX BATTERY(+)
BATTERY CHARGER, OUT(−)	10	20	AUX BATTERY(−)
BATTERY CHARGER, TEMP SENSE CABLE			AUX BATTERY CASE
---------- OR ----------			
IF USING AUXILIARY SOLAR ARRAY:			
AUX PV ARRAY(+)	10	48	SDB, AUX ARRAY IN TERM(+)
AUX PV ARRAY(−)	10	48	SDB, AUX ARRAY IN TERM(−)

BILL OF MATERIALS

ITEM	TYPE	SOURCE OF SUPPLY	QUANTITY
SOLAR DISTRIBUTION BOX	SDB	G−SEC	1
ATON POWER SUPPLY	HIGH−WATTAGE (25−AMP)	G−SEC	1
POWER SUPPLY MONITOR BOX	PSMB	G−SEC	1
BATTERY CHARGER ---------- OR ---------- AUX SOLAR ARRAY	SCBF 100−12−25 ---------- OR ---------- SX−38MM OR M−75	G−SEC ---------- OR ---------- SOLAREX OR SIEMENS	1
AUX BATTERY, NI−CAD, 400 AH, TEN 1.2−VOLT CELLS	ED−400	SAFT NIFE, INC.	1
SOLAR AID CONTROLLER II	SACII	G−SEC	2
DIODE	1N4001	COMMERCIAL	5
ROTATING BEACON, 12 VOLT	VRB−25	VEGA INDUSTRIES LIMITED	1
MAIN LAMPS	12VDC, 110 WATT	E/G−ICP	6, SEE NOTE 4
HI CURRENT LAMPCHANGER	2086B	C−R CONTROL SYSTEM, INC.	1
LOW VOLTAGE DROP KIT	LVDK	G−SEC	SEE NOTE 5
EMERGENCY LIGHT	300 MM	TIDELAND SIGNAL COR.	1
EMERGENCY LAMPS	12VDC, 3.05A	E/G−ICP	6
LAMPCHANGER, 12 VOLT	CG−6P	E/G−ICP	1
SPECIAL RHYTHM FLASHER	CG−181	C−R CONTROL SYSTEMS, INC.	1, SEE NOTE 6
RESISTOR R1	6800 OHM, 1/2 WATT 5% TOLERANCE	COMMERCIAL	1
PHOTORESISTOR	L	E/G−ICP	1
SOUND SIGNAL	FA−232/02	AUTOMATIC POWER, INC.	2
SOLID−STATE RELAY 12 AMP, NORMALLY OPEN	MODEL D1D12	CRYDOM OR EQUIVALENT	1
SOUND SIGNAL CURRENT DETECTOR	SSCD	G−SEC	2
LEACMS ASSEMBLY	GCF−W−1221−LEACMS	G−SEC	1
RACON	TIDELAND SIGNAL CORP.	G−OPN	1

NOTES:

1. SYSTEM DESIGNED ON THE PREMISE THAT THE POWER SUPPLY, PSMB, AND SDB WILL BE LOCATED NEAR EACH OTHER WITH SIGNAL LOADS FARTHER UP THE LIGHTHOUSE STRUCTURE. SACIIs SHOULD BE MOUNTED IN THE SDB ENCLOSURE. ASSURE THAT GOOD THERMAL CONTACT IS PRESENT BETWEEN THE SACII AND MOUNTING PANEL.
2. WIRE SIZES ARE BASED ON MAXIMUM ANTICIPATED LOADS. WIRES MAY BE RESIZED ONLY IF LOAD AND POWER SUPPLY/PSMB CIRCUIT VOLTAGE DROPS DO NOT EXCEED 0.35 VOLT AND 0.75 VOLT, RESPECTIVELY.
3. MAXIMUM DISTANCES SHOWN IN THE WIRE RUNNING LIST ARE BASED ON THE CONFIGURATION SHOWN ON SHEET 1. CONSULT WITH THE WIRE SIZING CHAPTER OF COMDTINST M16500.24 WHEN CONFIGURATION IS DIFFERENT.
4. THIS SYSTEM IS DESIGNED AROUND THE 110 WATT LAMP; REDUCED POWER LAMPS MAY ALSO BE USED WHERE REDUCED OPERATIONAL PERFORMANCE IS ACCEPTABLE. HOWEVER, WHEN USING REDUCED POWER LAMPS SMALLER THAN THE STANDARD 50 WATT TUNGSTEN−HALOGEN LAMP, THE SACII−L1's CURRENT THRESHOLD MUST BE READJUSTED. REFER TO COMDT(G−SEC−2A) DOCUMENT SACII ADJUSTMENT FOR LOW CURRENT MAIN LAMPS (20− to 40−WATTS) FOR DETAILED INSTRUCTIONS ON THIS IMPORTANT AND NECESSARY SACII ADJUSTMENT PROCEDURE.
5. THE LOW VOLTAGE DROP KIT (LVDK) PACKAGE CONSISTS OF TWO TERMINAL BOXES AND TWO #12/2 SO CABLES (6 FT. EA.).
6. ONLY C−R CONTROL SYSTEMS, INC. FLASHER WILL PERFORM EMERGENCY LIGHT CIRCUIT FUNCTION.
7. REFER TO DWG 140411 FOR FOG DETECTOR AND SSCD INTERCONNECTION DETAILS.
8. REFER TO DWG 140410, REV E FOR OLDER VERSIONS OF SDB.

REV.	DATE	APPR.	DESCRIPTION	BY

DESIGNED: KA
DRAWN: KA
TRACED:
CHECKED: JTG
REVIEWED BY:
REVIEWED BY: H. R. CLEVELAND
G−SEC−2A
REVIEWED BY: R. J. LEGIER
G−SEC−2

U.S. COAST GUARD HEADQUARTERS
CIVIL ENGINEERING

STANDARD AID TO NAVIGATION
COMMERCIAL POWERED CAT I - III
12VDC LIGHTHOUSE SYSTEM
WITH EMERGENCY SIGNALS

APPROVED: CAPT J. A. RAUCH
CHIEF, OFFICE OF CIVIL ENGINEERING
DATE

UNLESS OTHERWISE SPECIFIED:
ALL DIMENSIONS ARE IN INCHES.
TOLERANCES: DIM.
ANG.

DRAWING NUMBER 130426
REV.
SCALE: NONE
SHEET 2 OF 2

PLOTTING SCALE: