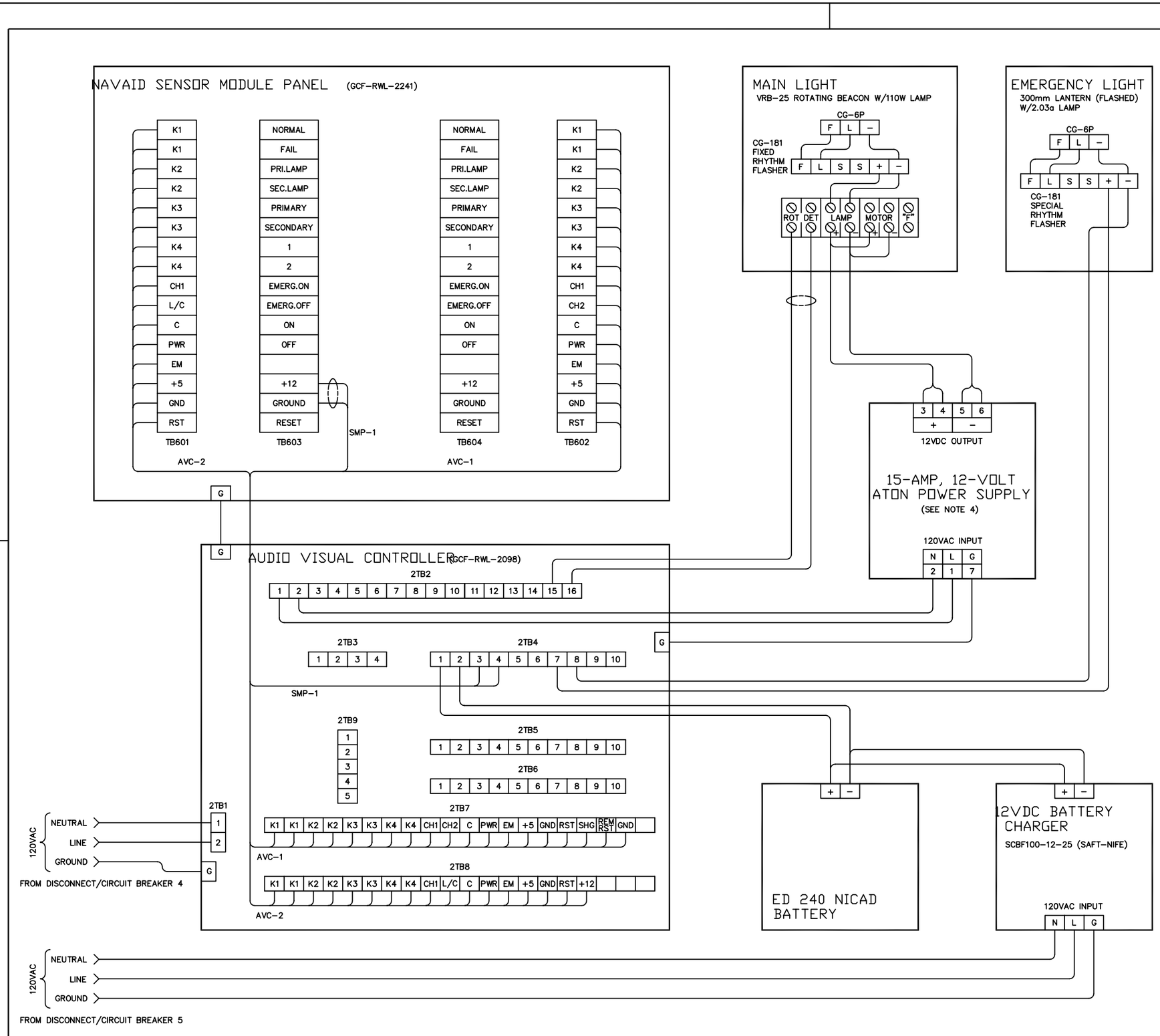

POINT TO POINT WIRE RUNNING LIST

FROM	WIRE SIZE (AWG)	WIRE CODE	CABLE DESIGNATION	TO
AVC, 2TB8-1 (K1)	22	E	AVC-2	NVSP, TB601-K1
AVC, 2TB8-2 (K1)	22	E	AVC-2	NVSP, TB601-K1
AVC, 2TB8-3 (K2)	22	E	AVC-2	NVSP, TB601-K2
AVC, 2TB8-4 (K2)	22	E	AVC-2	NVSP, TB601-K2
AVC, 2TB8-5 (K3)	22	E	AVC-2	NVSP, TB601-K3
AVC, 2TB8-6 (K3)	22	E	AVC-2	NVSP, TB601-K3
AVC, 2TB8-7 (K4)	22	E	AVC-2	NVSP, TB601-K4
AVC, 2TB8-8 (K4)	22	E	AVC-2	NVSP, TB601-K4
AVC, 2TB8-9 (CH1)	22	E	AVC-2	NVSP, TB601-CH1
AVC, 2TB8-10 (L/C)	22	E	AVC-2	NVSP, TB601-L/C
AVC, 2TB8-11 (C)	22	E	AVC-2	NVSP, TB601-C
AVC, 2TB8-12 (PWR)	22	E	AVC-2	NVSP, TB601-PWR
AVC, 2TB8-13 (EM)	22	E	AVC-2	NVSP, TB601-EM
AVC, 2TB8-14 (+5)	22	E	AVC-2	NVSP, TB601-+5
AVC, 2TB8-15 (GND)	22	E	AVC-2	NVSP, TB601-GND
AVC, 2TB8-16 (RST)	22	E	AVC-2	NVSP, TB601-RST
AVC, 2TB7-1 (K1)	22	E	AVC-1	NVSP, TB602-K1
AVC, 2TB7-2 (K1)	22	E	AVC-1	NVSP, TB602-K1
AVC, 2TB7-3 (K2)	22	E	AVC-1	NVSP, TB602-K2
AVC, 2TB7-4 (K2)	22	E	AVC-1	NVSP, TB602-K2
AVC, 2TB7-5 (K3)	22	E	AVC-1	NVSP, TB602-K3
AVC, 2TB7-6 (K3)	22	E	AVC-1	NVSP, TB602-K3
AVC, 2TB7-7 (K4)	22	E	AVC-1	NVSP, TB602-K4
AVC, 2TB7-8 (K4)	22	E	AVC-1	NVSP, TB602-K4
AVC, 2TB7-9 (CH1)	22	E	AVC-1	NVSP, TB602-CH1
AVC, 2TB7-10 (CH2)	22	E	AVC-1	NVSP, TB602-CH2
AVC, 2TB7-11 (C)	22	E	AVC-1	NVSP, TB602-C
AVC, 2TB7-12 (PWR)	22	E	AVC-1	NVSP, TB602-PWR
AVC, 2TB7-13 (EM)	22	E	AVC-1	NVSP, TB602-EM
AVC, 2TB7-14 (+5)	22	E	AVC-1	NVSP, TB602-+5
AVC, 2TB7-15 (GND)	22	E	AVC-1	NVSP, TB602-GND
AVC, 2TB7-16 (RST)	22	E	AVC-1	NVSP, TB602-RST
AVC, 2TB4-4	18	D	SMP-1	NVSP, TB603-+12VDC
AVC, 2TB4-3	18	D	SMP-1	NVSP, TB603-GROUND
AVC, 2TB4-10		D	SMP-1, SHIELD	NO CONNECTION
AVC, CASE GND	12	A	SMP-1, BARE/GRN	NVSP, CASE GROUND
AVC, 2TB2-1	12	C		ATON PWR SPLY, PIN 1
AVC, 2TB2-2	12	C		ATON PWR SPLY, PIN 2
AVC, CASE GND	12	C		ATON PWR SPLY, PIN 7
ATON PWR SPLY, PINS 3 & 4	12	B		VRB-25, LAMP (+)
ATON PWR SPLY, PINS 5 & 6	12	B		VRB-25, LAMP (-)
VRB-25, LAMP (+)	18	A		VRB-25, MOTOR (+)
VRB-25, LAMP (-)	18	A		VRB-25, MOTOR (-)
VRB-25, ROT DET, 1st TERM	18	D		AVC, 2TB2-15
VRB-25, ROT DET, 2nd TERM	18	D		AVC, 2TB2-16
AVC, 2TB4-6		D	SHIELD	NO CONNECTION
120VAC, BREAKER 4, LINE	12	C		AVC, 2TB1-2
120VAC, NEUTRAL BUS	12	C		AVC, 2TB1-1
120VAC, GROUND BUS	12	C		AVC, CASE GROUND
120VAC, BREAKER 5, LINE	12	C		BATT CHRGR, LINE IN
120VAC, NEUTRAL BUS	12	C		BATT CHRGR, NEUTRAL IN
120VAC, GROUND BUS	12	C		BATT CHRGR, CASE GRND
BATT CHRGR, 12VDC (+) OUT	12	B		ED 240 NICAD BATT (+)
BATT CHRGR, 12VDC (-) OUT	12	B		ED 240 NICAD BATT (-)
ED 240 NICAD BATT (+)	12	B		AVC, 2TB4-1
ED 240 NICAD BATT (-)	12	B		AVC, 2TB4-2
AVC, 2TB4-7	12	B		EMERG LT, CG-181 (+)
AVC, 2TB4-8	12	B		EMERG LT, CG-181 (-)

WIRE CODES:

A. SINGLE CONDUCTOR STRANDED, THWN INSULATION.
B. TWO CONDUCTOR STRANDED, THWN INSULATION.
C. THREE CONDUCTOR STRANDED, THWN INSULATION.
D. TWO CONDUCTOR SHIELDED BELDEN #8760.
E. NINETEEN INDIVIDUALLY SHIELDED PAIRS BELDEN #8769.

NOTES:

1. INSIDE AVC, QUAD (4) LOOP LINE FEEDER TO A/N POWER SUPPLY THRU CURRENT DETECTOR 1CD1.
2. REMOVE AVC JUMPER BETWEEN 2TB2-15 AND 16; MAIN LIGHT AND MOTOR OPERATES 24HRS/DAY.
3. INSTALL A/N POWER SUPPLY AS CLOSE TO MAIN LIGHT AS POSSIBLE.
4. SEE CONNECTOR TERMINATION INSTRUCTION PACKED WITH POWER SUPPLY.

REV.	DATE	APPR.	DESCRIPTION	BY

DESIGNED: HRC
DRAWN: KA
TRACED:
CHECKED: JG
REVIEWED BY: J. GRASSON G-ECV-3C
REVIEWED BY: H. R. CLEVELAND G-ECV-3C
REVIEWED BY: L. E. JAEGER G-ECV-3

U.S. COAST GUARD HEADQUARTERS
CIVIL ENGINEERING

STANDARD AID TO NAVIGATION
CAT I-III (120VAC)
AVC/NAVAID SENSOR/VRB-25
LIGHTHOUSE SYSTEM

APPROVED: J. A. RAUCH
CHIEF, CIVIL ENGINEERING DIVISION
DATE 2/23/96

UNLESS OTHERWISE SPECIFIED:
ALL DIMENSIONS ARE IN INCHES.
TOLERANCES: DIM.
ANG.

DRAWING NUMBER 130425 REV.
SCALE: NONE SHEET 1 OF 1

PLOTTING SCALE: